HABA-BETON
MONOLITHIC IDEAS WWW.HABA-BETON.COM



Robust & durable

High-performance concrete (acid-resistant concrete) pipes, manholes and constructions are resistant to strong chemical exposure (XA3).

DIN 1045-2 and DIN EN 206

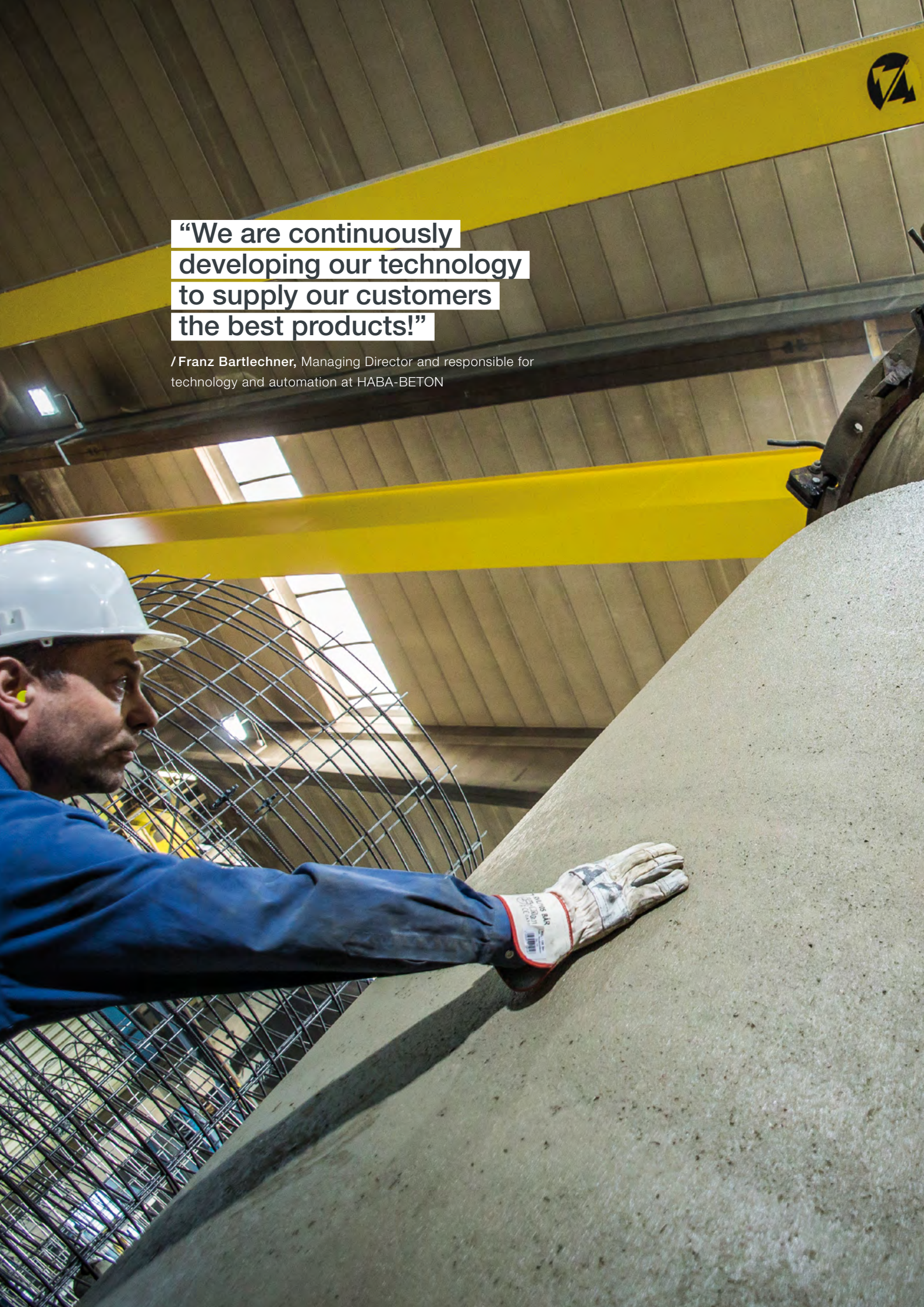

“We are continuously developing our technology to supply our customers the best products!”

/ **Franz Bartlechner,** Managing Director and responsible for technology and automation at HABA-BETON



With 10 production sites in Germany, Austria and Poland, HABA-BETON is one of the European market leaders amongst the manufacturers of precast concrete products for civil engineering. The aerial view shows the plant in Großsteinberg near Leipzig.

The team at HABA-BETON

Quality from a single cast

HABA-BETON is synonymous with competence and quality in civil engineering – and this has been the case since 1912. The family-owned company from Upper Bavaria has been relying on this for four generations. HABA-BETON epitomises continuous development.

As a company, HABA-BETON is built on solid foundations – around 400 employees work for HABA-BETON throughout Europe. HABA-BETON manufactures its products in Bavaria, Baden-Württemberg, Saxony, Austria and Poland according to strictly controlled quality standards. The consistent further development of the products guarantees compliance with all relevant EU and country standards. With its dedicated and motivated employees, HABA-BETON is a reliable partner for engineering firms, construction companies and public clients. Pipes, shaft systems, monolithic containers, individual constructions, environmental technology and paving stones are the core areas of the HABA-BETON business.

At www.haba-beton.com you will find a wide range of reference objects that reflect the diversity of our products and the satisfaction of our customers.

Professional planning in advance, continuous further development in production and ongoing controls guarantee the high quality of our products.

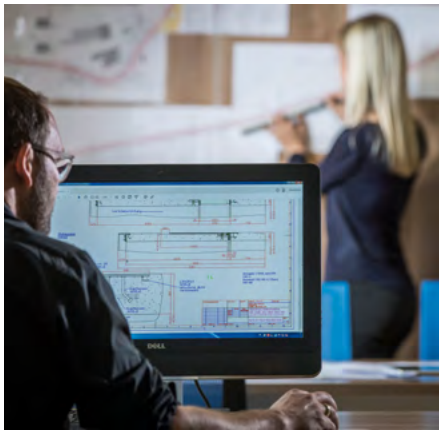



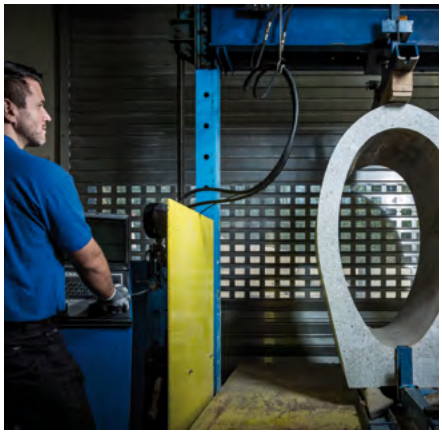



FBS material analysis

Particularly durable

Its long service life is a compelling argument in favour of concrete. This is the result of a study commissioned by the Federal Association of Concrete Sewer Systems (FBS).

Pipe material	Service life in years according to		
	KVR (short-term deflection) guidelines [3]	Manufacturer specifications	Practical experience
Concrete/reinforced	50 to 80 (100)	> 100	> 100
Polymer concrete		> 60	approx. 40
GFRP		50 to 80 (100) (according to [3])	approx. 50

Guidelines for selecting pipe materials for municipal drainage systems
Prof. Dr.-Ing. Stein & Partner GmbH, Bochum



“The products that leave our production are checked and tested by us and external institutions.”

/**Hermann Bauer,** responsible for propulsion technology at the Teising site

Conclusion: **Excerpt from the expert report**

“Concrete and reinforced concrete pipes, in particular those manufactured in accordance with the high requirements of the FBS quality guidelines, have a service life of more than 100 years when used properly. This is demonstrated by examples in communities where these types of old concrete piping are still in use today.”

Our products

Unique

FBS-certified concrete components are high-performance underground champions.

- Outstanding leak-tightness up to 2.5 bar
- Durability
- Efficient compared to other materials
- Range of cross-sectional shapes and variety of applications
- Unique position stability
- No deformation as a result of external stresses
- Optimal hydraulic properties and minimal friction coefficient
- High temperature resistance, for example, in connection with damaged or dangerous goods
- Individual solutions for special applications such as conveying aggressive acids or alkalis





SW-Beton11 high-performance concrete

Particularly resistant

SW-Beton11 (acid-resistant concrete) is a high-performance concrete that is used in conjunction with DIN EN 206 in the case of heavy chemical attacks (exposure class XA3) according to DIN 1045-2.

Sewer systems are increasingly being subjected to industrial influences and chemical attacks. Components made of concrete and reinforced concrete have proved themselves here for decades. Common applications up to exposure class XA2 can be covered by the standard FBS quality of our pipes and manholes.
If higher requirements apply, our acid-resistant concrete SW-Beton11 is deployed. This can be used to manufacture all products hardened with formwork.

This is high-strength (C50/60), smooth and low pore concrete and is suitable for environmental conditions in exposure class XA3 (pH 3.5). In the case of higher levels of aggressiveness, DIN EN 206 / DIN 1045-2 requires additional protection for the concrete. Here, for example, we offer durable PE lining.
All HABA-BETON products hardened with formwork (pipes, jacking pipes, frame profiles, etc.) can be supplied with PE lining (partial lining). Landfill shafts are a specific application here.

Expert report confirms the level of aggressiveness for SW-Beton11 according to DIN 1045-2 and DIN EN 206 or DIN 4030-1



Criterion	Level of aggressiveness			Limit value according to Rule Sheet 115 BWB*
	Slightly aggressive XA1	Moderately aggressive XA2	Severely aggressive XA3	SW-Beton11 (acid-resistant concrete)
pH value	≤ 6.5 and ≥ 5.5	< 5.5 and ≥ 4.5	< 4.5 and ≥ 4.0	approx. 3.5
Carbonic acid soluble in limestone in mg/l	≥ 15 and ≤ 40	> 40 and ≤ 100	> 100 to saturation	approx. 150
Sulfate content in mg/l	≥ 200 and ≤ 600	> 600 and ≤ 3000	> 300 and ≤ 6000	approx. 6000

*Excerpt from the expert opinion 20DE-01821OR01, Kiwa; * Berlin Water Companies*







Our products with SW-Beton11

- Reinforced concrete pipes, circular
- Flume pipes
- Egg-shaped pipes
- Foot section tubes
- Frame profiles
- Jacking pipes & lowering manholes
- Individual constructions
- Manholes

A condensed overview of these can be found on the following pages.



Conclusion: Excerpt from the Kiwa expert report

*"We certify the tested concrete with the designation **SW-Beton11** from HABA-BETON on the basis of the available test results, the continued suitability for exposure class XA3 according to DIN 1045-2:2008-08 in conjunction with DIN EN 206:2001-07 without additional protective measures for resistance to sulphur saturation (pH 3.5), carbonic acid soluble in limestone up to 150 mg/l and sulphate contents up to 6000 mg/l"*

Our pipes with SW-Beton11 (acid-resistant concrete)

Here you will find a condensed overview of our product portfolio. In general, all products hardened with formwork can be produced at HABA-BETON with the requirement level XA3.

Reinforced concrete pipes, **circular**

DN 500 – 1200; **bell socket**

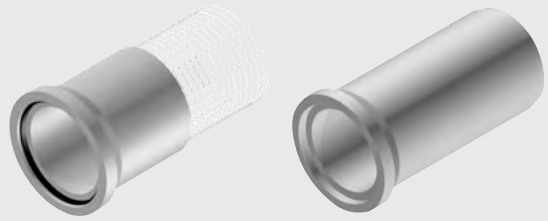

DN 300 – 3800; **Rebate sleeve**

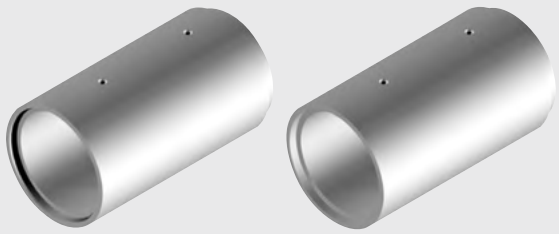

DN 1600, 2000, 2200;
Rebate sleeve with foot

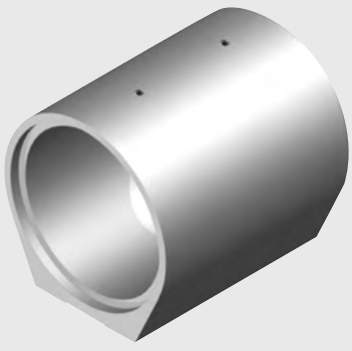

Reinforced concrete pipes, **kite profile**

DN 800 – 1300; **bell socket**

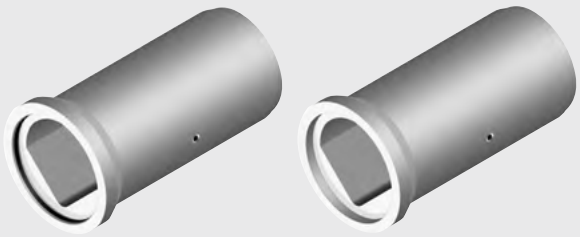

DN 800 – 3000; **Rebate sleeve**

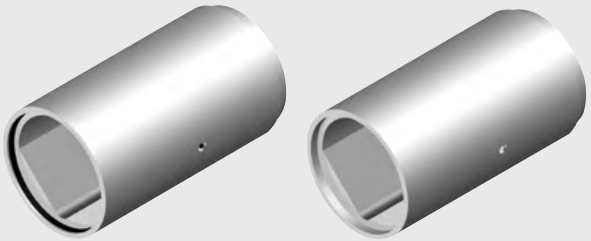

DN 1600, 2000, 2200;
Rebate sleeve with foot

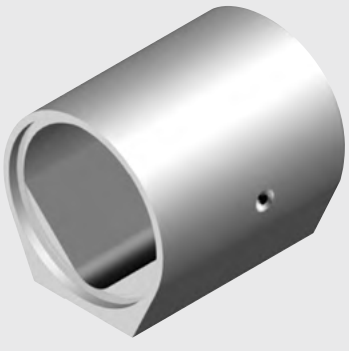

Reinforced concrete pipes, **dry weather flume**

DN 1000 – 1200; **bell socket**

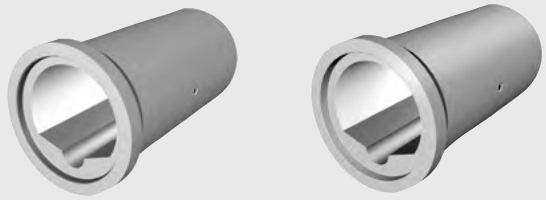

DN 1200 – 2500; **Rebate sleeve**

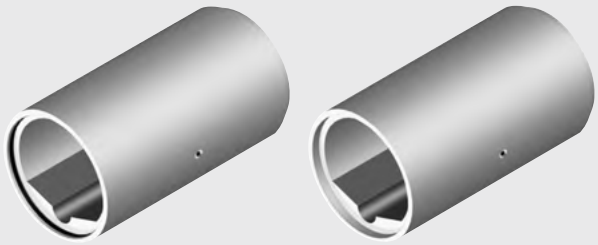

DN 1600, 2000; **Rebate sleeve with foot**

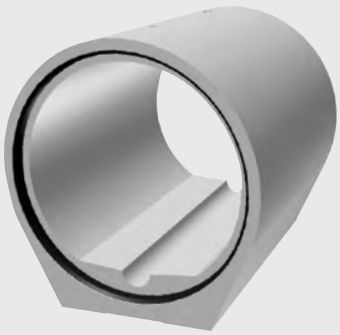

Reinforced concrete pipes, **ovoid profile**

DN 250/375 – 1600/2400; **bell socket**

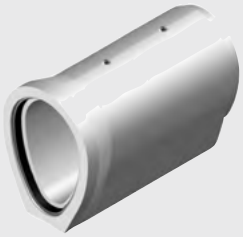

Reinforced concrete pipes, **foot section**

DN 1200/900 – 3600/2250; **Rebate sleeve with foot**

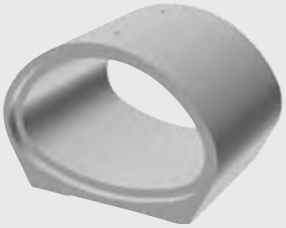

Reinforced concrete pipes, **frame profile**

DN 1000/750 – 4000/4000; **Rebate sleeve**

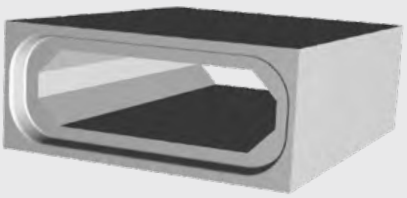

Containers & special constructions with SW-Beton11 (acid-resistant concrete)



Jacking pipes & lowering manholes

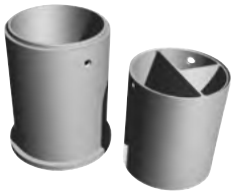

Containers & manholes

Jacking pipes DN 300 – 3200

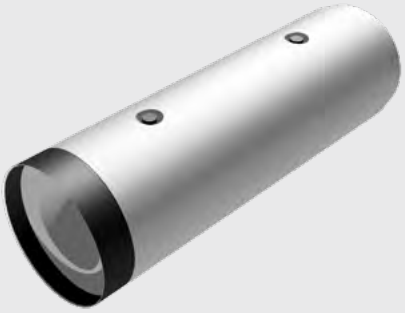

Lowering manholes DN 1500 – 3600

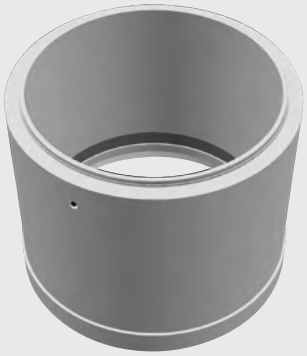

Jacking pipes can also be supplied with a flume or frame profile.

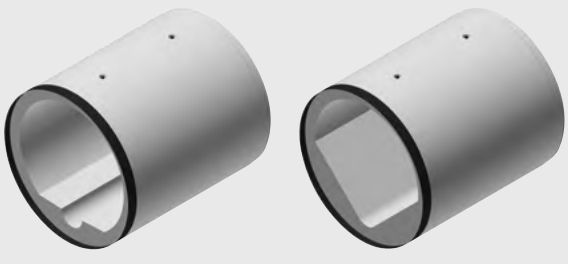

Manhole bases DN 1000, 1200, 1500

PERFECT



Flume version can be individually selected.
Production from a single cast.

Monolithic containers DN 1000 – 3000



Landfill shafts DN 800 – 3200





Individual constructions

HABA-CONCRETE supplies factory-made manhole constructions that meet your exactrequirements. precisely, efficiently and with a high level of quality.

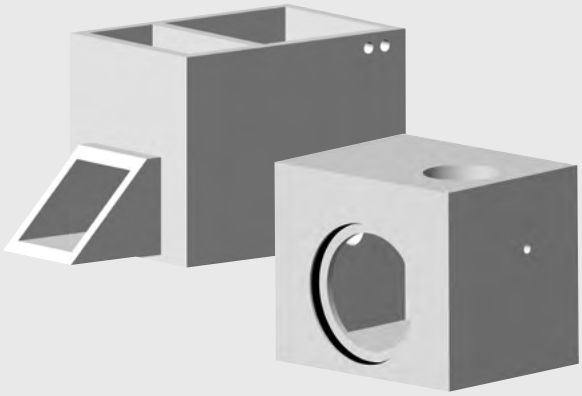

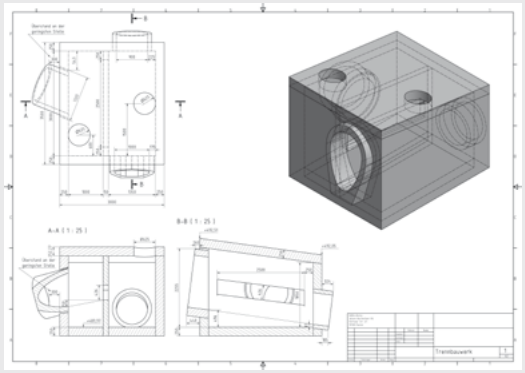

Individual planning and equipment
Flumes, overflow spillways and other mounting parts (e.g. covers, risers) are planned and installed at the factory according to individual requirements.











Locations

1 D-84518 Garching a. d. Alz +49 / 86 34 / 62 40-0 2 D-88317 Aichstetten +49 / 75 65 / 94 14-0 3 D-04668 Großsteinberg +49 / 3 42 93 / 440-0
4 D-84576 Teising +49 / 86 33 / 509 64-0 5 D-92708 Mantel +49 / 9605 / 9203-0 6 A-5431 Kuchl +43 / 6245 / 82 400 7 A-3134 Nußdorf +43 / 27 83 / 41 38
8 PL-47-143 Ujazd +48 / 77 / 405 69-00 *Paving-stone plants:* 9 D-84577 Tüßling +49 / 86 33 / 50 77-0 10 D-86842 Türkheim +49 / 82 45 / 96 01-0

Our sales offices: 1 CH-9300 Wittenbach +41 / 71 290 18 60 2 CH-5313 Klingnau +41 / 56 245 46 00 3 HU-2890 Tata +36 / 30 / 4749-341
For further information about our locations, please refer to **www.haba-beton.eu**

Product Range

Pipes


Circular pipes


Invert channel pipes


Ovoid pipes


Arch pipes


Other pipes
(joints: rebated, mortar)

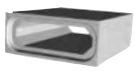
Rectangular units


Special components

Shaft/chamber systems


Perfect shaft


Base units


Chamber unit
(joints: rebated, rubber sealing)


Chamber unit
(joints: rebated, mortar)


Auxiliary equipment

Microtunnelling


Jacking pipes


Caisson shafts

Monolithic containers


Pump chambers


Auxiliary equipment

Environmental technology


Wastewater treatment
(circular)


Wastewater treatment
(monolithic)


Waste disposal shafts


Settlement plants

Water storage


Rainwater
storage

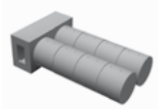
Drinking water
storage

Surface drainage


HABA drain

Wall system

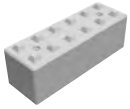
HABA block


L-shaped retaining walls

Paving stones


www.haba-pflastersteine.de

HABA-BETON | Johann Bartlechner KG | Langschwert 72 | D-84518 Garching a. d. Alz
Phone +49/86 34/62 40-0 | info@haba-beton.eu | www.haba-beton.eu

Photos: HABA-BETON, iStockfoto (2), Tobias Tullius, Bernhard Huber | Design: www.pittner-design.de | 2.2026_XA3_EN